BluePulsar

rev 1.0 (2013.12.23)
Bizan Nishimura (@lipoyang)

This design is licensed under the Creative Commons Attribution-ShareAlike license.
This license allows for both personal and commercial derivative works,
as long as proper credit given to Bizan Nishimura and the design is released under the same license.

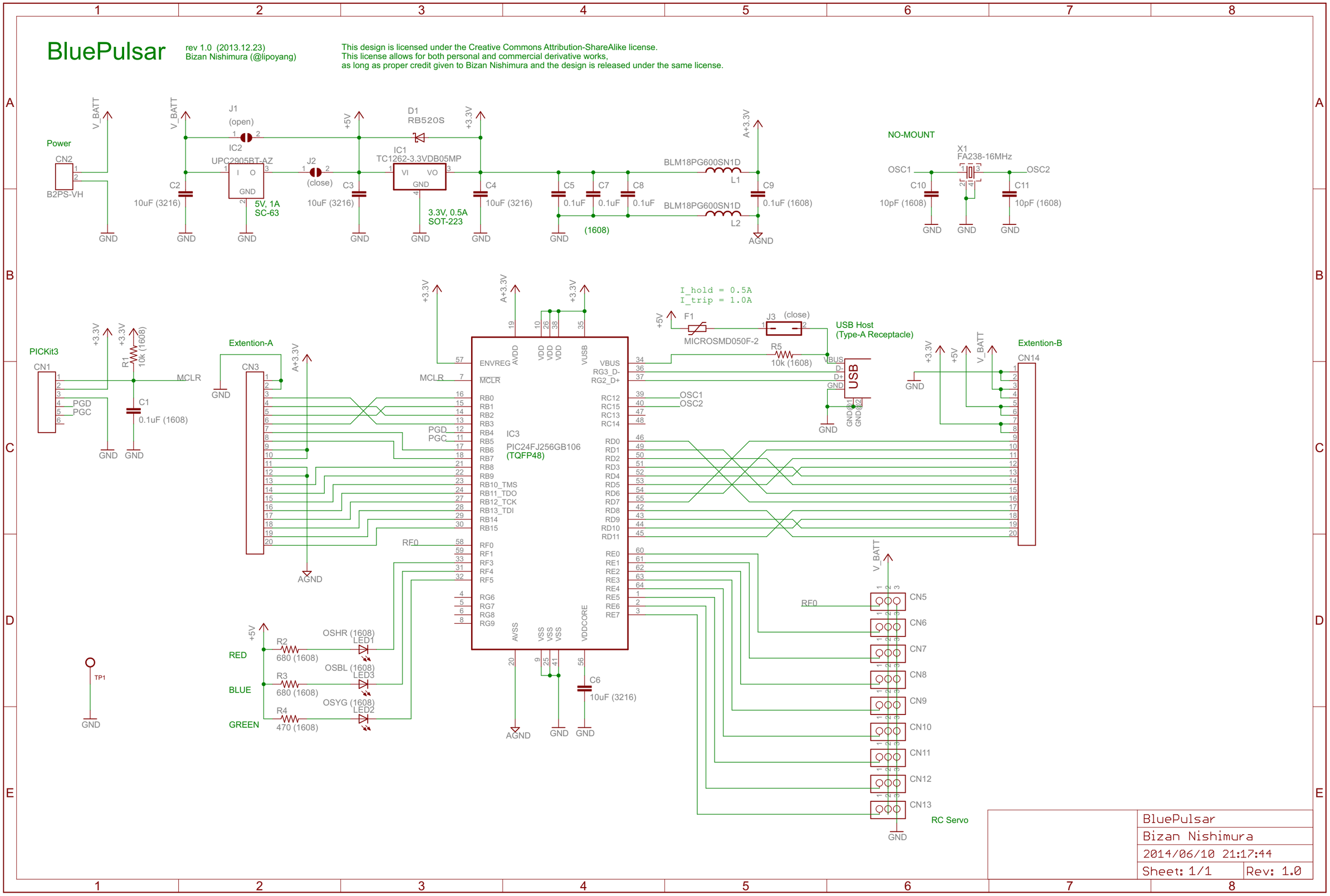

BluePulsar	
Bizan Nishimura	
2014/06/10 21:17:44	
Sheet: 1/1	Rev: 1.0